C.I.P.	455 MK II Country of Origin: GB	TAB.	IV
		Date	84-06-14
		Revision	07-05-14

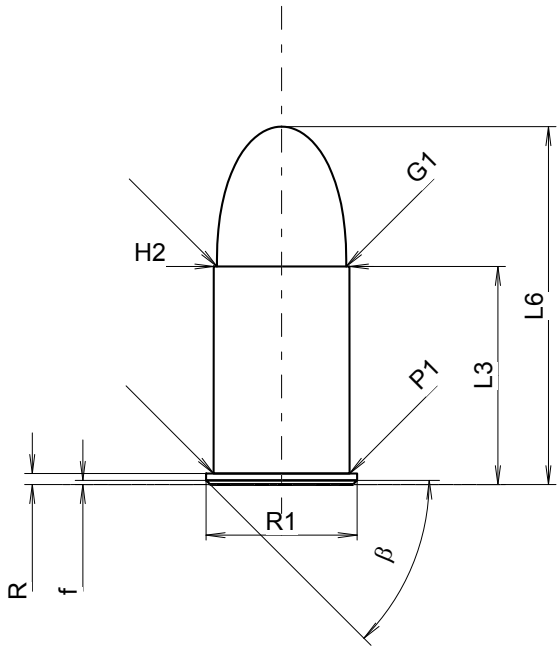

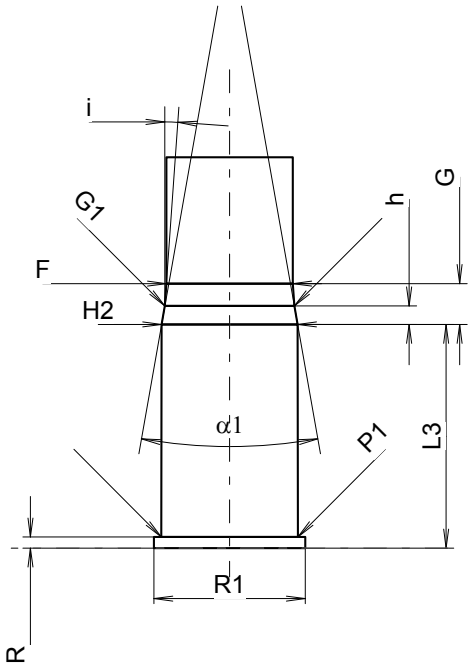

Scale 1.48:1

CARTRIDGE MAXI

Lengths

L1	=		
L2	=		
L3 1)	=	19.50	
L4	=		
L5	=		
L6	=	32.00	

Case Head

R 1)	=	1.00	-0.25
R1	=	13.50	
R3	=		
E	=		
E1	=		
e min	=		
δ	=		
f	=	0.38	
β	=	45°	

Powder Chamber

P1	=	12.15
P2	=	

Junction Cone

α	=	
S	=	
r1 min	=	
r2	=	

Collar

H1	=	
H2 1)	=	12.14

Projectile

G1 1)	=	11.57
G2	=	
F	=	
L3+G 1)	=	23.15

Pressures (Energies)
Method Transducer

Pmax	=	900	bar
PK	=	1035	bar
PE	=	1170	bar
M	=	7.50	

Miscellaneous Dimensions

Fe 1)4)	=	0.25
delta L	=	

CHAMBER MINI

Lengths

L1	=	
L2	=	
L3 1)	=	20.00

Breech

R 1)	=	1.00
R1	=	13.55
R2	=	
R3	=	
r	=	

Powder Chamber

E	=	
P1 1)	=	12.20
P2	=	

Junction Cone

α	=	
S	=	
r1 max	=	
r2	=	

Collar

H1	=	
H2 1)	=	12.16

Commencement of Rifling

G1 1)*	=	11.58	
G 1)*	=	3.65	
α1	=	20°	
h *	=	1.65	
s	=		
i 1)	=	4°	
w	=		

Barrel

F 1)*	=	11.30	
Z 1)	=	11.55	

Grooves

b	=	3.80	
N	=	7	
u	=	500.00	
Q	=	103.68	mm²

Dimensions in << mm >>
Dimensions and Tolerances for Proof Barrels
see Appendix CR 1.

Notes:
1) Check for safety reasons
4) Headspace on Rim
* Basic dimensions